HOME SOURCE

Bromwell Ottoman Storage Box

Assembly Instructions - Please keep for future reference

OTTBROWHT

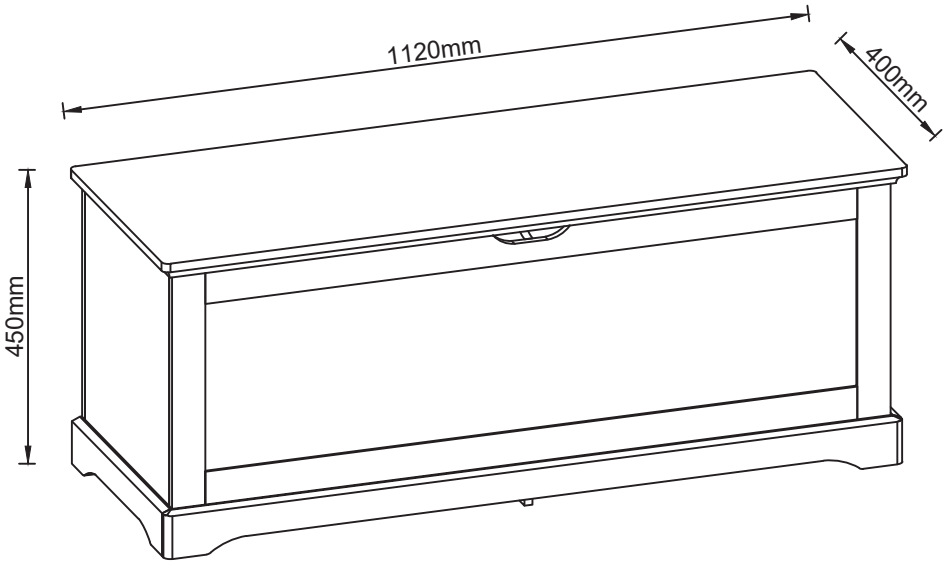

Dimensions	No. people	Assembly Time	SKU #
Width: 112cm Depth: 40cm Height: 45cm		20 mins (approx.)	OTTBROWHT

Important

- PLEASE READ THESE INSTRUCTIONS FULLY BEFORE STARTING ASSEMBLY
- PLEASE DO NOT THROW THE PACKAGING AWAY UNTIL YOU ARE SATISFIED WITH PURCHASE, GOODS NEED TO BE RETURNED IN ORIGINAL PACKAGING.

If you need help or have damaged or missing parts, please email support@home-source.co.uk

Safety and Care Advice

Important

- PLEASE READ THESE INSTRUCTIONS FULLY BEFORE STARTING ASSEMBLY
- PLEASE DO NOT THROW THE PACKAGING AWAY UNTIL YOU ARE SATISFIED WITH PURCHASE, GOODS NEED TO BE RETURNED IN ORIGINAL PACKAGING.

- Check you have all the components and tools listed on pages 4 and 5.
- Remove all fittings from the plastic bags and separate them into their groups.
- Keep children and animals away from the work area, small parts could choke if swallowed.
- Make sure you have enough space to lay out the parts before starting.
- Do not stand or put weight on the product, this could cause damage.
- Assemble the item as close to its final position (in the same room) as possible.
- Assemble on a soft, level surface to avoid damaging the unit or your floor.
- We do not recommend the use of power drill/drivers for inserting screws, as this could damage the unit. Only use hand screwdrivers.

- Dispose of all packaging carefully and responsibly.

Care and Maintenance

- Only clean using a damp cloth and mild detergent, do not use bleach or abrasive cleaners.
- From time to time check that there are no loose screws on this unit.
- This product should not be discarded with household waste. Take to your local authority waste disposal centre.

If kept outside please ensure in the winter months that the product is correctly covered or put away into a dry environment to prevent corrosion, weathering or damage.

If your product is not designed to be outside, we recommend that it is always kept indoors in a dry environment.

If you are unhappy with the product and wish to return it, please follow the retailer's returns procedure.

Exploded View

If you have damaged or missing components,
email: **support@home-source.co.uk**

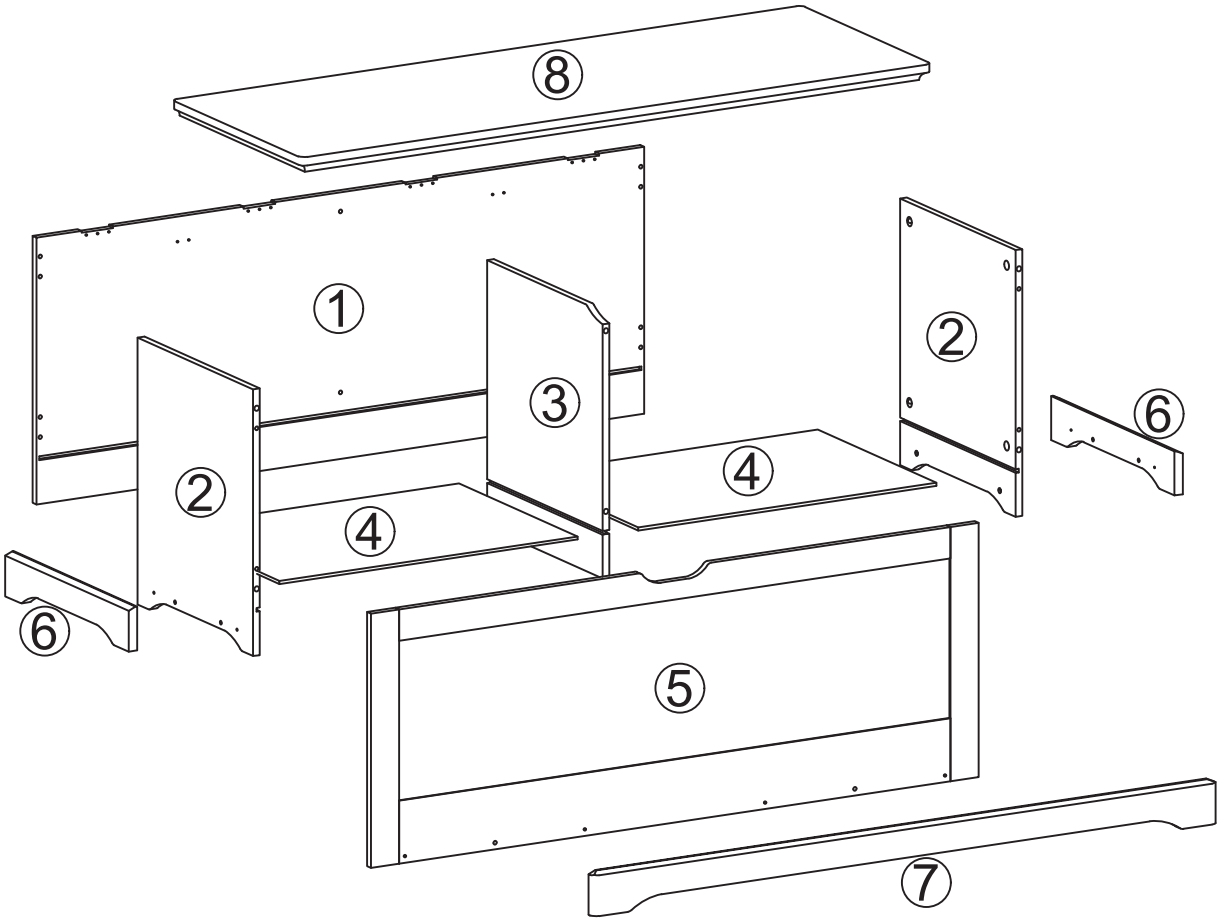

Components - Fixings

If you have damaged or missing components,
email: **support@home-source.co.uk**

Please check that you have all the components listed below before constructing your item.

Note: The quantities below are the correct amount to complete the assembly. In some cases more fittings may be supplied than are required.

(A)	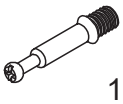 12pcs	**(B)**	12pcs	**(C)**	8pcs	**(D)**	8pcs
(E)	6pcs	**(F)**	24pcs	**(G)**	8pcs	**(H)**	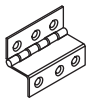 4pcs
(I)	2pcs						

Tools Required

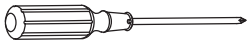
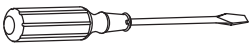
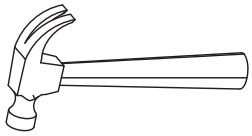

Ruler - Use this to measure your screws (mm)

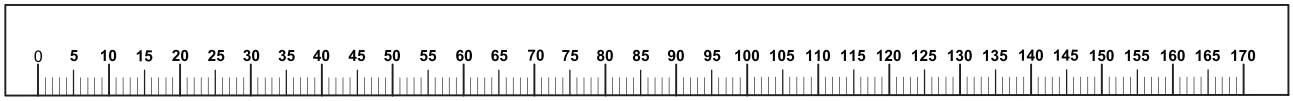

Important - Please read these instructions fully before starting assembly

If you need help or have damaged or missing parts, please email **support@home-source.co.uk**

Assembly Instructions

If you have damaged or missing components,
email: **support@home-source.co.uk**

Step 1

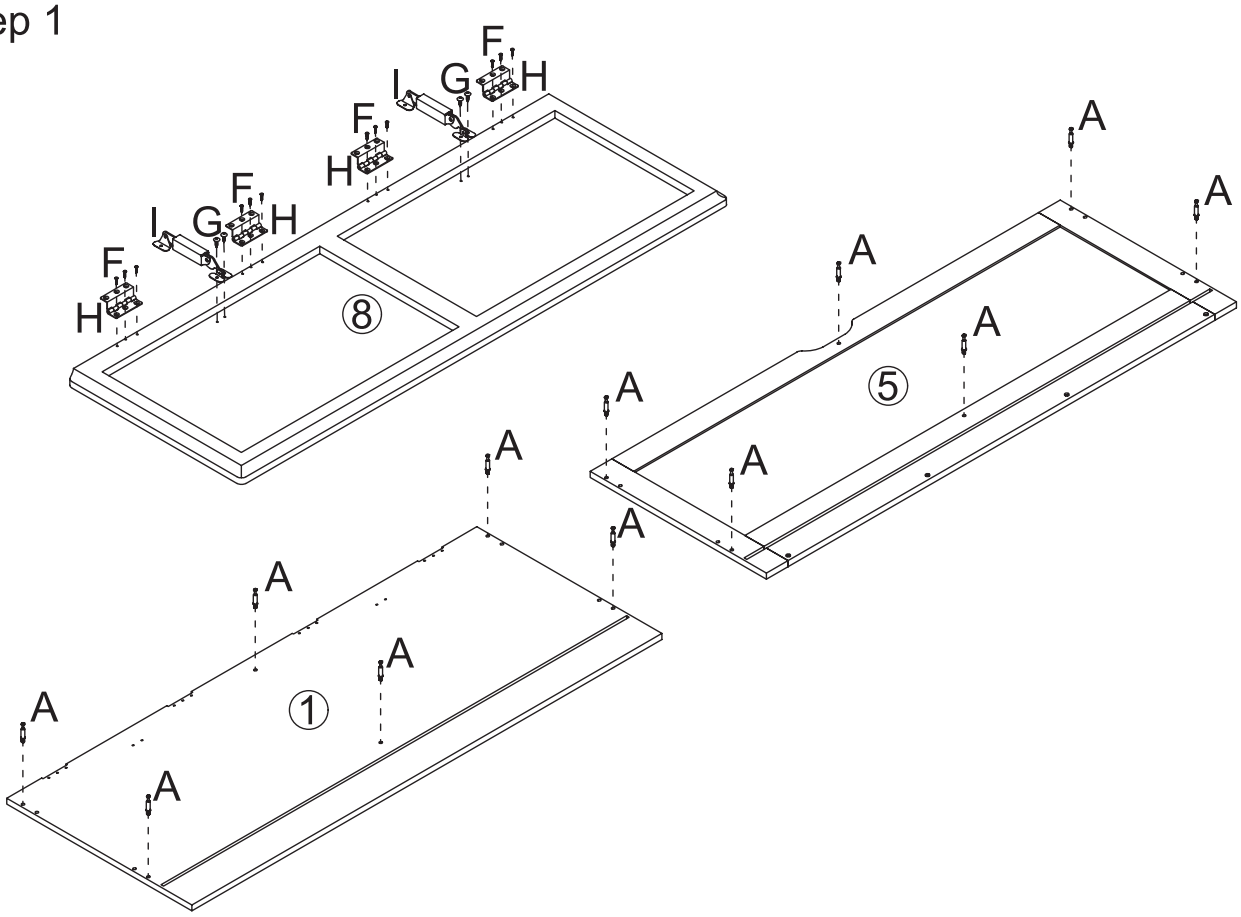

Step 2

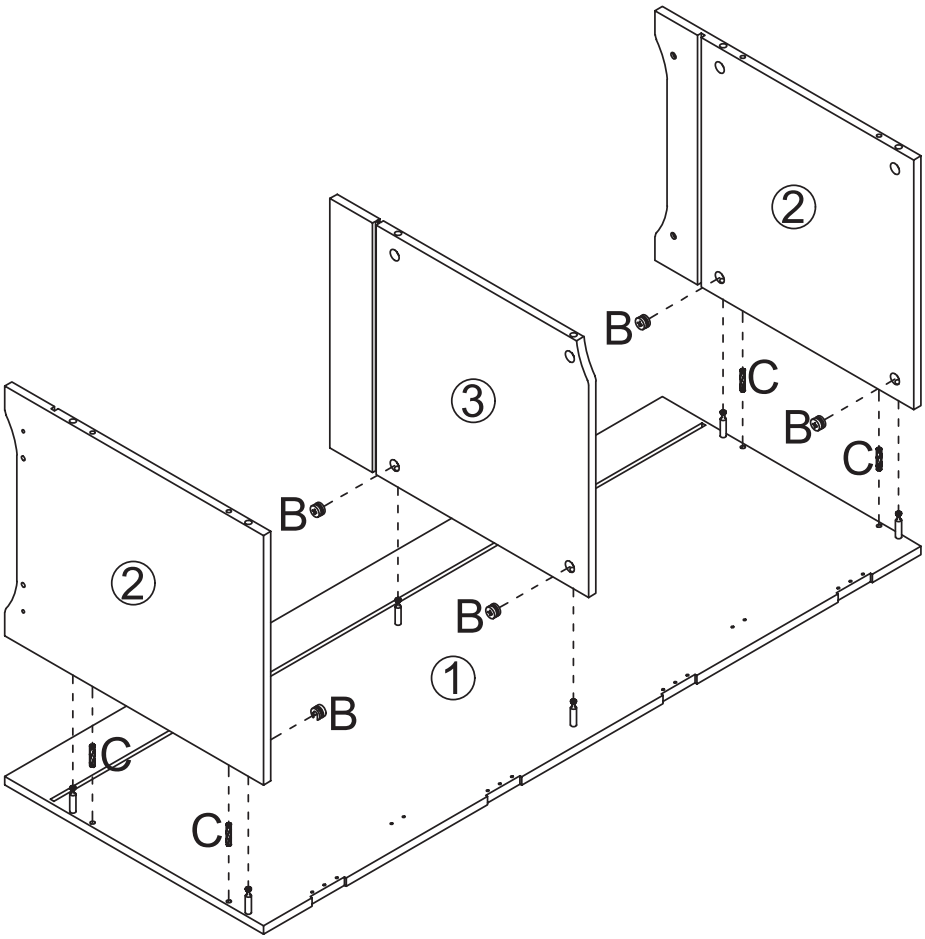

If you have damaged or missing components,
email: **support@home-source.co.uk**

Assembly Instructions

Step 3

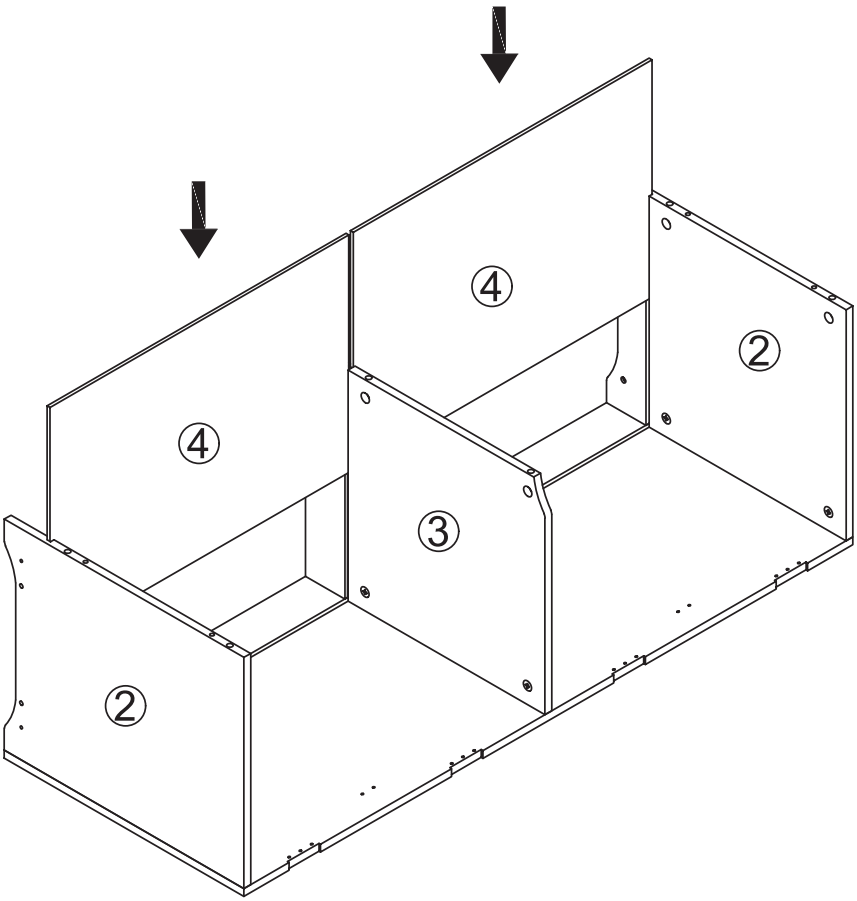

Step 4

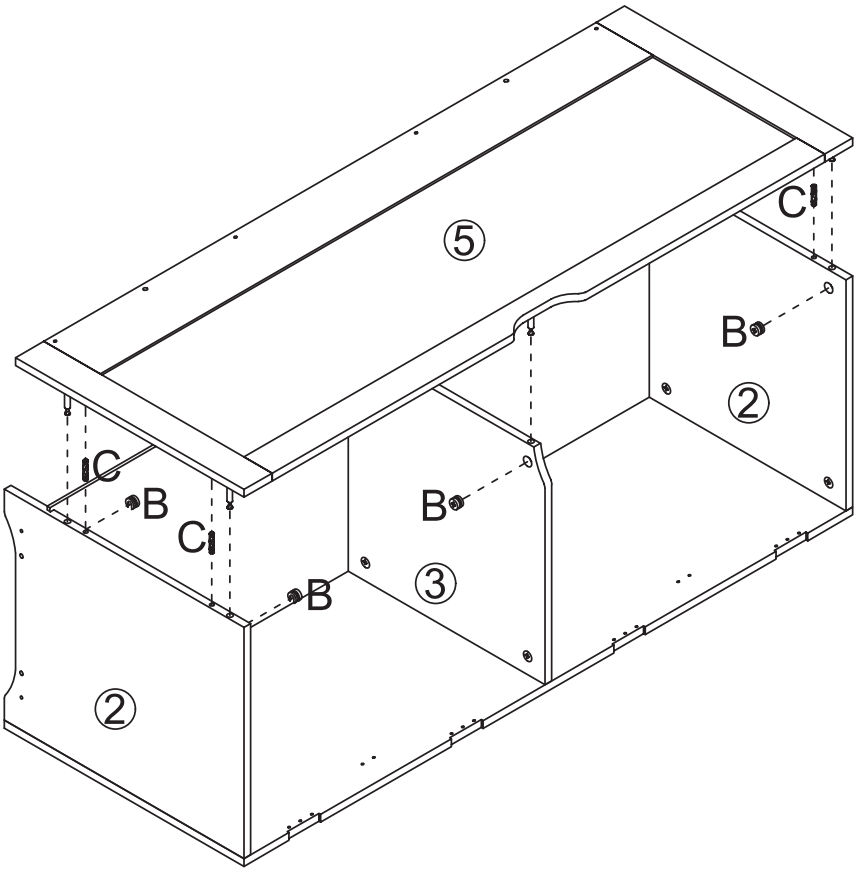

Assembly Instructions

If you have damaged or missing components,
email: **support@home-source.co.uk**

Step 5

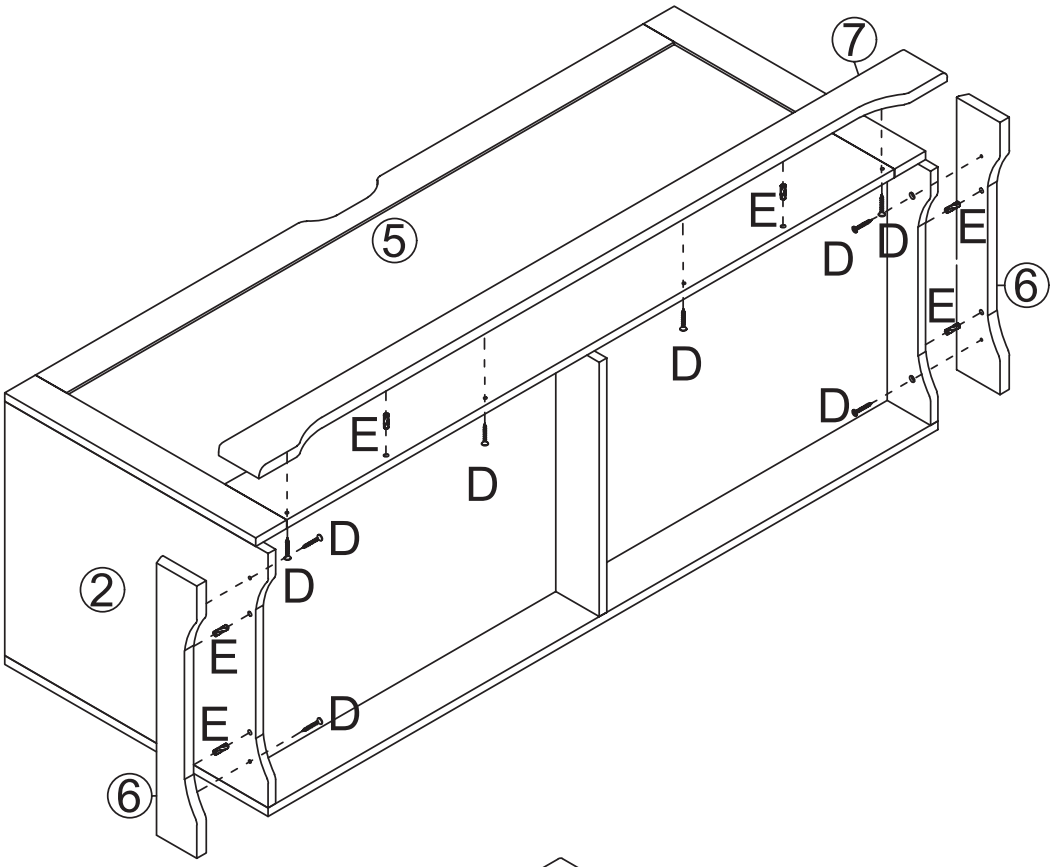
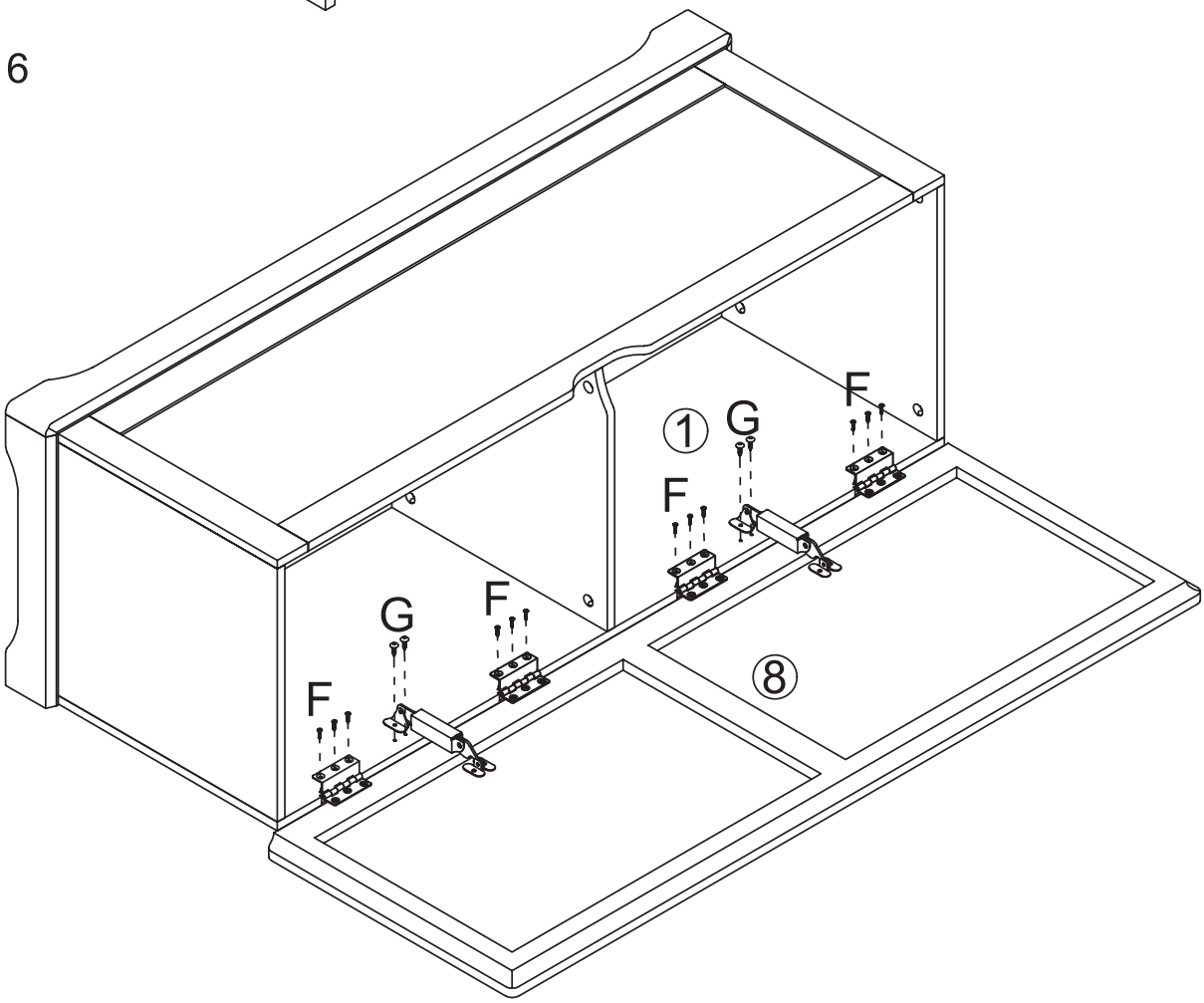
Step 6