HOME SOURCE

EXTRA LARGE RADIATOR COVER

Assembly Instructions – Please keep for future reference	RADLOXXLW	RADLOXXLB

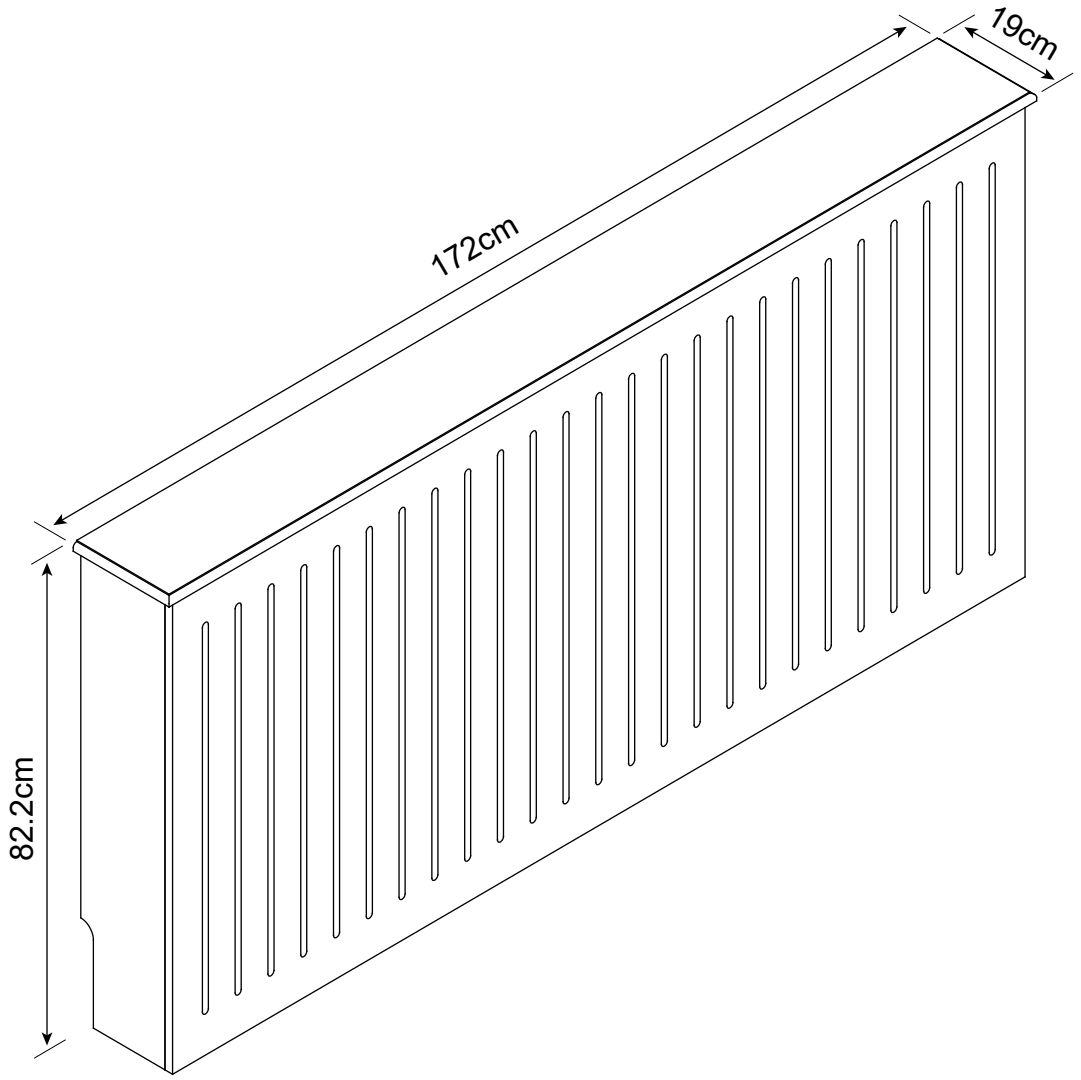

Dimensions	No. people	Assembly Time	OW #
Width: 172cm Depth: 19cm Height: 82.5cm		20 mins (approx.)	RADLOXXLW RADLOXXLB

Important

- PLEASE READ THESE INSTRUCTIONS FULLY BEFORE STARTING ASSEMBLY
- PLEASE DO NOT THROW THE PACKAGING AWAY UNTIL YOU ARE SATISFIED WITH PURCHASE, GOODS NEED TO BE RETURNED IN ORIGINAL PACKAGING.

If you need help or have damaged or missing parts, please email support@home-source.co.uk

⚠ Safety and Care Advice

Important

- PLEASE READ THESE INSTRUCTIONS FULLY BEFORE STARTING ASSEMBLY
- PLEASE DO NOT THROW THE PACKAGING AWAY UNTIL YOU ARE SATISFIED WITH PURCHASE, GOODS NEED TO BE RETURNED IN ORIGINAL PACKAGING.

- Check you have all the components and tools listed on pages 4 and 5.
- Remove all fittings from the plastic bags and separate them into their groups.
- Keep children and animals away from the work area, small parts could choke if swallowed.
- Make sure you have enough space to lay out the parts before starting.
- Do not stand or put weight on the product, this could cause damage.
- Assemble the item as close to its final position (in the same room) as possible.
- Assemble on a soft, level surface to avoid damaging the unit or your floor.
- We do not recommend the use of power drill/drivers for inserting screws, as this could damage the unit. Only use hand screwdrivers.
- Dispose of all packaging carefully and responsibly.

Warnings

CHILD SAFETY

ANCHOR AND PROTECT A CHILD
Use of anti-tip kit is required

·Place heaviest items in the lowest drawers.
·Useless specifically designed to accommodate, do not set TVs or other heavy objects on top of this product.
·Never allow children to climb or hang on drawers, doors or shelves.
·Never open more than one drawer at a time.
·Do not defeat or remove the drawer interlock system.
·Use of tip-over restraints may only reduce, but not eliminate, the risk of tip-over.

CLIMBING MAY RESULT IN SERIOUS INJURY

Care and Maintenance

- Only clean using a damp cloth and mild detergent, do not use bleach or abrasive cleaners.
- From time to time check that there are no loose screws on this unit.
- This product should not be discarded with household waste. Take to your local authority waste disposal centre.

If kept outside please ensure in the winter months that the product is correctly covered or put away into a dry environment to prevent corrosion, weathering or damage.

If your product is not designed to be outside, we recommend that it is always kept indoors in a dry environment.

If you are unhappy with the product and wish to return it, please follow the retailer's returns procedure.

Exploded View

If you have damaged or missing components,
email: support@home-source.co.uk

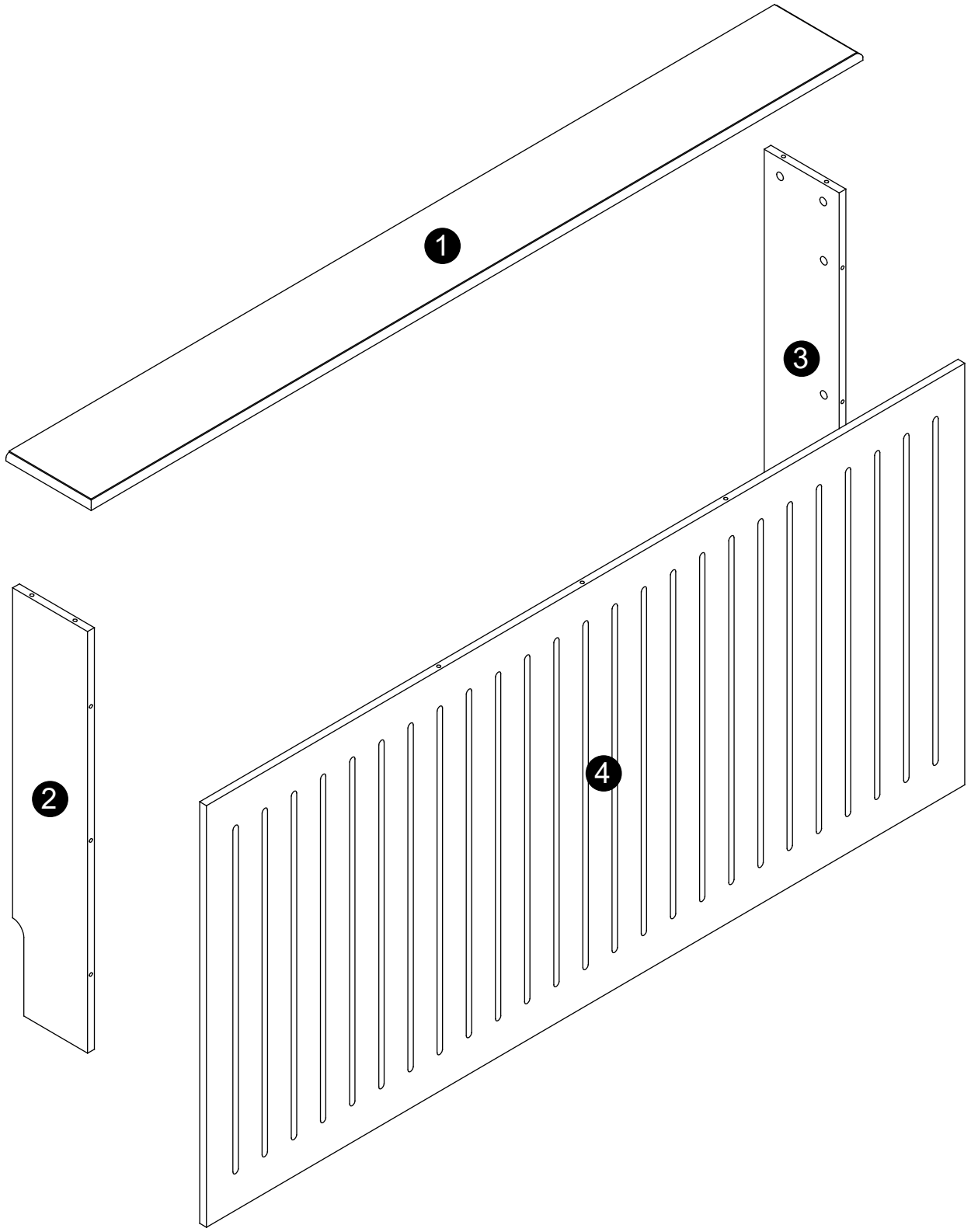

Components - Panels

If you have damaged or missing components,
email: support@home-source.co.uk

Please check that you have all the components listed below before constructing your item.

Part No	Description	Qty	Size (mm)	Thickness (mm)
1	TOP PANEL	1	1720x190	15
2	LEFT PANEL	1	810x167	15
3	RIGHT PANEL	1	810x167	15
4	FRONT PANEL	1	1690x810	15

Important – Please read these instructions fully before starting assembly

If you need help or have damaged or missing parts, please email support@home-source.co.uk

Components - Fixings

If you have damaged or missing components,
email: support@home-source.co.uk

Please check that you have all the components listed below before constructing your item.

Note: The quantities below are the correct amount to complete the assembly. In some cases more fittings may be supplied than are required.

(A)	CAM lock dowel x13 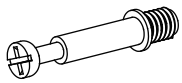	(B)	CAM lock x13 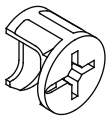	(G)	Wood block x2 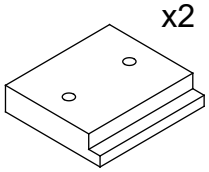	(D)	Screw x4 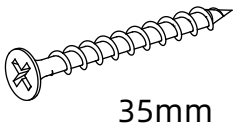 35mm
(E)	Wall anchor x4 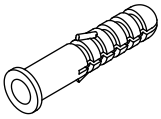						

Tools Required

Ruler – Use this to measure your screws (mm)

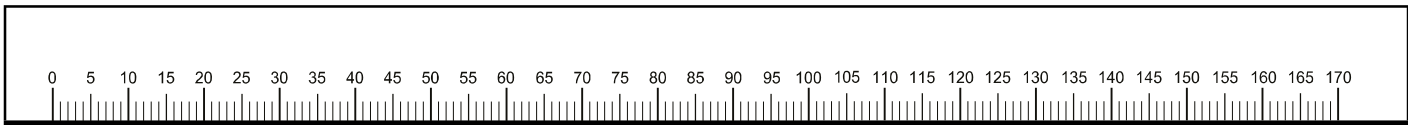

Important – Please read these instructions fully before starting assembly

If you need help or have damaged or missing parts, please email support@home-source.co.uk

Assembly Instructions

If you have damaged or missing components,
email: support@home-source.co.uk

Step 1

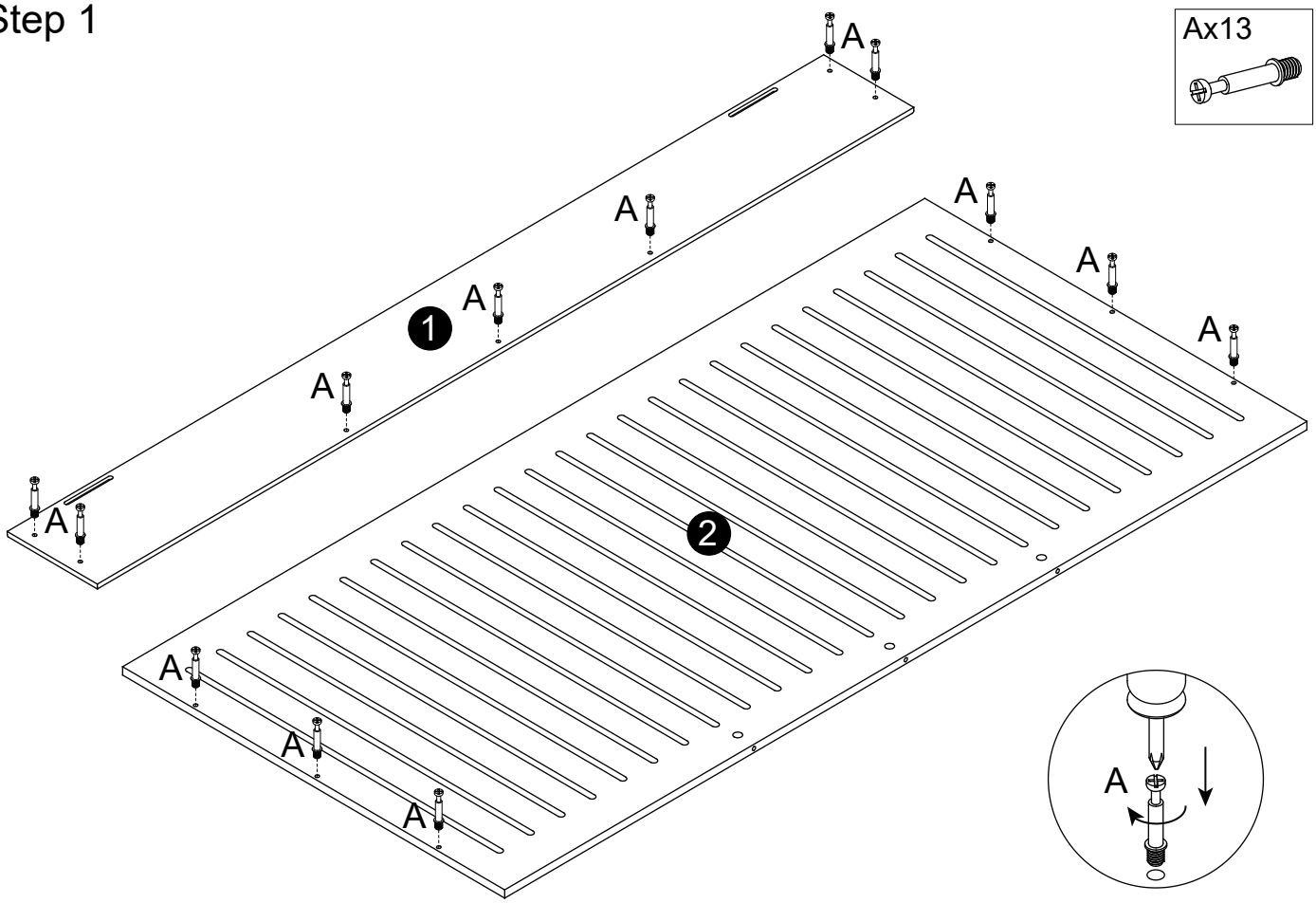

Step 2

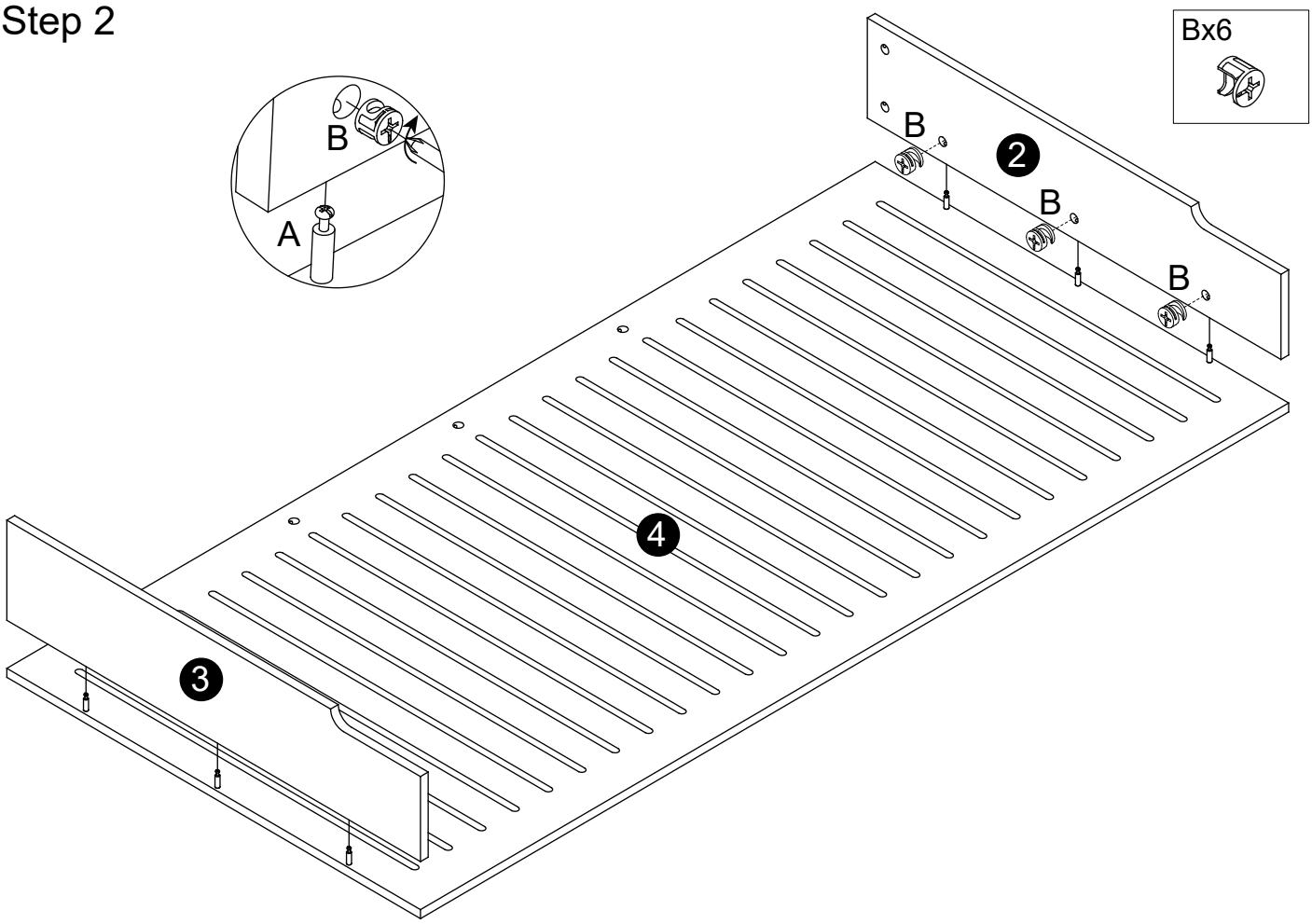

Assembly Instructions

If you have damaged or missing components,
email: support@home-source.co.uk

Step 3

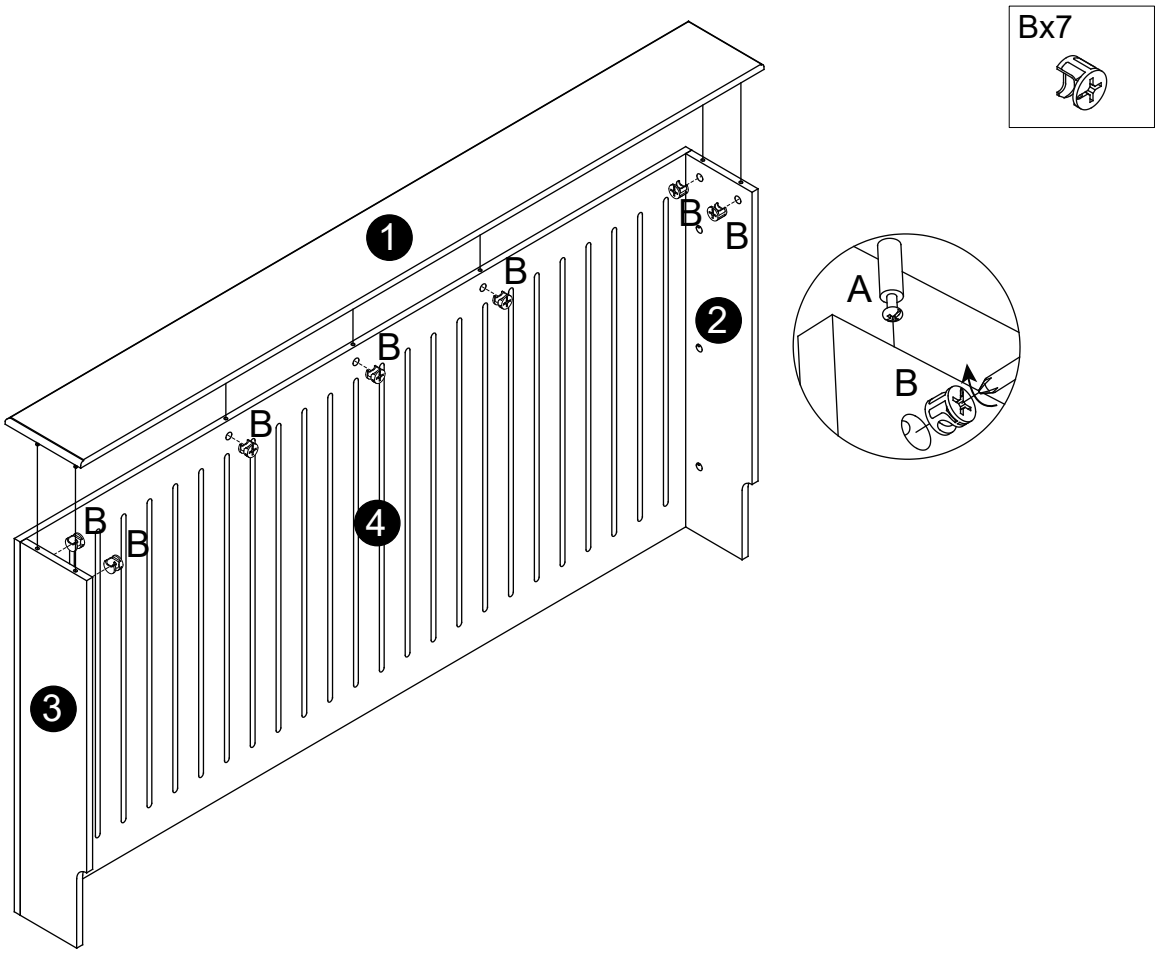

Step 4

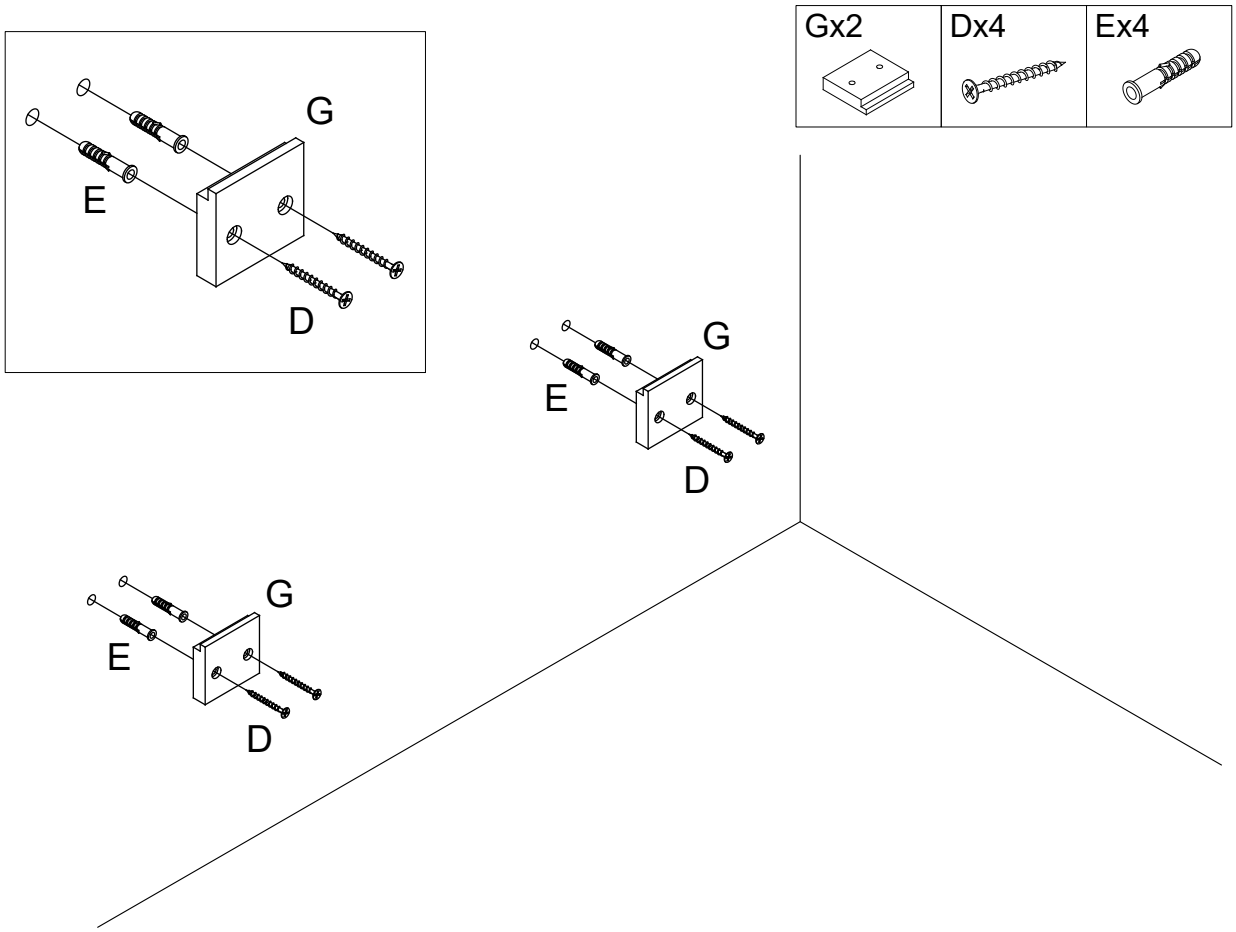

Assembly Instructions

If you have damaged or missing components,
email: support@home-source.co.uk
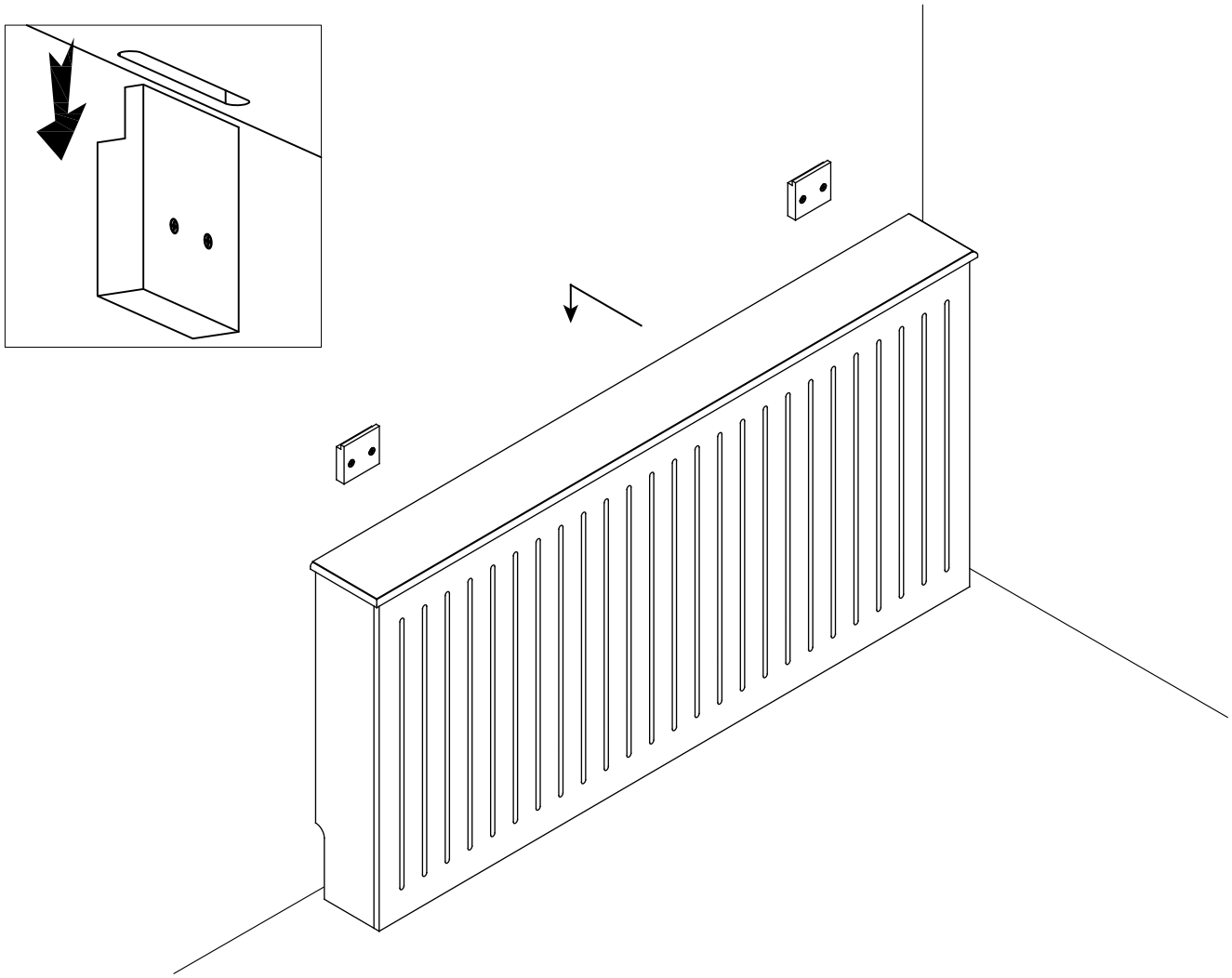
Step 5