GLOBAL PROCUREMENT AND MARKETING LIMITED

Product Name Luna

Assembly Instructions – Please keep for future reference	SOFLUNGRY	

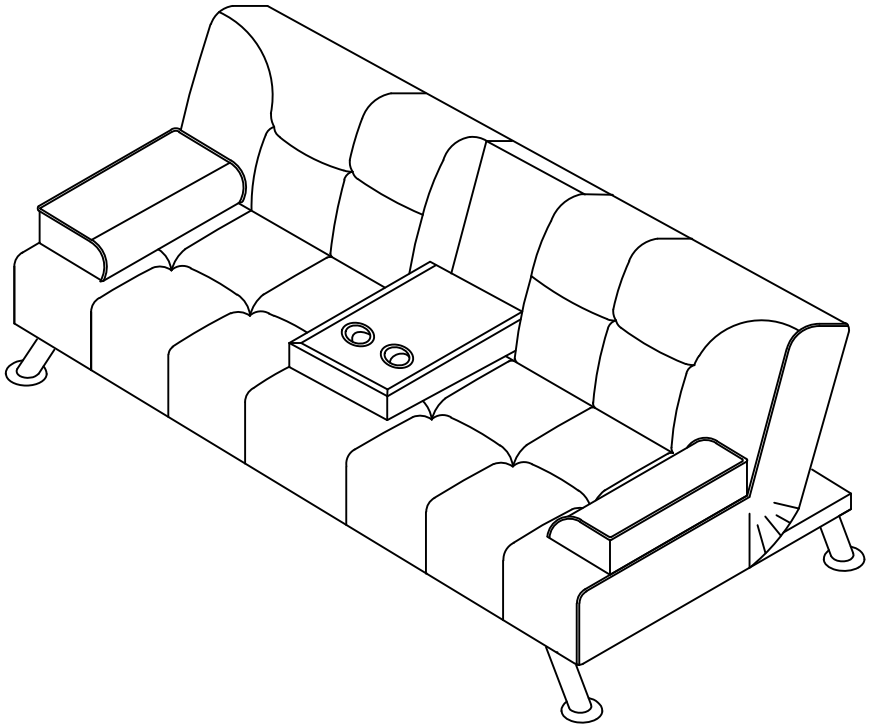

Dimensions	No. people	Assembly Time	OW #
Width: cm Depth: cm Height: cm		00 mins (approx.)	00000 / 00000 00000 / 00000

thank you

For purchasing this **GPM Limited** product

Important

PLEASE READ THESE INSTRUCTIONS FULLY BEFORE STARTING ASSEMBLY

PLEASE DO NOT THROW THE PACKAGING AWAY UNTIL YOU ARE SATISFIED WITH PURCHASE, GOODS NEED TO BE RETURNED IN ORIGINAL PACKAGING.

If you need help or have damaged or missing parts, please email aftersales@gpmfurniture.co.uk

Safety and Care Advice

Important

PLEASE READ THESE INSTRUCTIONS FULLY BEFORE STARTING ASSEMBLY

PLEASE DO NOT THROW THE PACKAGING AWAY UNTIL YOU ARE SATISFIED WITH PURCHASE, GOODS NEED TO BE RETURNED IN ORIGINAL PACKAGING.

Check you have all the components and tools listed on pages 4 and 5.

Remove all fittings from the plastic bags and separate them into their groups.

Keep children and animals away from the work area, small parts could choke if swallowed.

Make sure you have enough space to lay out the parts before starting.

Do not stand or put weight on the product, this could cause damage.

Assemble the item as close to its final position (in the same room) as possible.

Assemble on a soft, level surface to avoid damaging the unit or your floor.

We do not recommend the use of power drill/drivers for inserting screws, as this could damage the unit. Only use hand screwdrivers.

Dispose of all packaging carefully and responsibly.

Glass Warnings

1. Do not place very hot or very cold items against or in close proximity to glass surfaces unless an adequately thick insulating material is used to prevent such items from coming into contact with the glass.
2. Do not strike the glass with hard or pointed items.
3. When cleaning glass panels or mirrors use a damp cloth or leather with washing up liquid or soft soap if necessary: do not use washing powders or any other substance containing abrasives since these substances can scratch glass.
4. It is essential that this unit is fixed to a wall with the fixings provided (if applicable).
5. The class of glass used complies with Class x of BS6206
   This product complies with BS7449: 1991
   Imported by Global Procurement and Marketing Ltd
   xxmm thickness tempered glass
   Model no. xxx Batch no. xxx
   Dimensions: 00 x 00 x 00mm
6. If a glass component is chipped or broken, replace with glass of the type described above. Consult the manufacturer, retailer or agent with regard to obtaining a manufacturing specification and shape for replacement glass quoting the model number and batch number or date of manufacture.

Care and Maintenance

Only clean using a damp cloth and mild detergent, do not use bleach or abrasive cleaners.

From time to time check that there are no loose screws on this unit.

This product should not be discarded with household waste. Take to your local authority waste disposal centre.

If kept outside please ensure in the winter months that the product is correctly covered or put away into a dry environment to prevent corrosion, weathering or damage.

If your product is not designed to be outside, we recommend that it is always kept indoors in a dry environment.

If you are unhappy with the product and wish to return it, please follow the retailer's returns procedure.

Exploded View

If you have damaged or missing components,
email: aftersales@gpmfurniture.co.uk

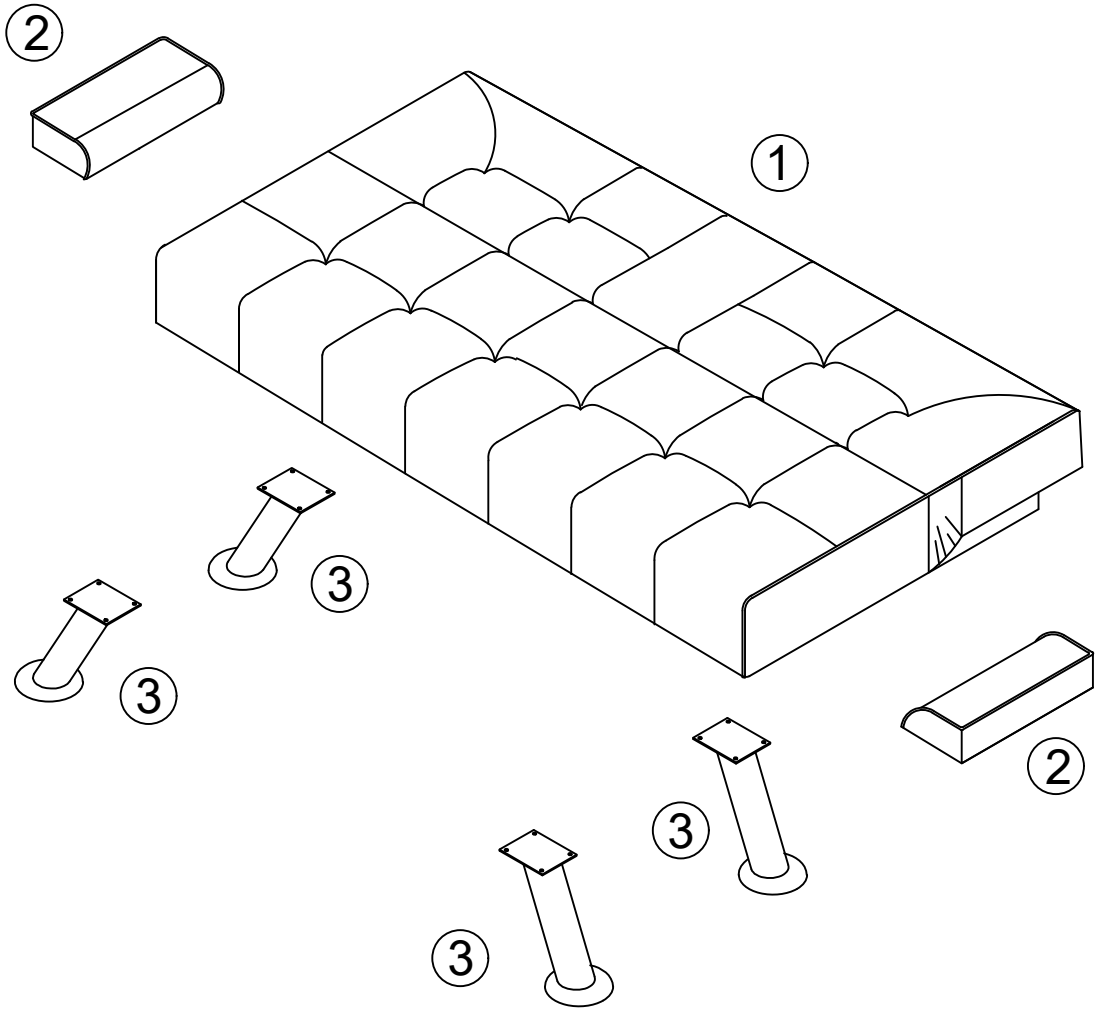

Components - Panels

If you have damaged or missing components,
email: aftersales@gpmfurniture.co.uk

Please check that you have all the components listed below before constructing your item.

Part No	Description	Qty	Size (mm)	Thickness (mm)
A	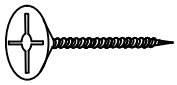 **Bolt-M5x25**	**16**	**25**	

Components - Fixings

Please check that you have all the components listed below before constructing your item.

Note: The quantities below are the correct amount to complete the assembly. In some cases more fittings may be supplied than are required.

(1)	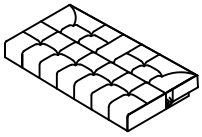 **X1**	**(2)**	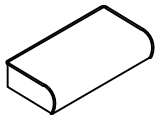 **X2**	**(3)**	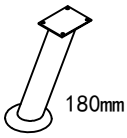 **X4**		

Ruler – Use this to measure your screws (mm)

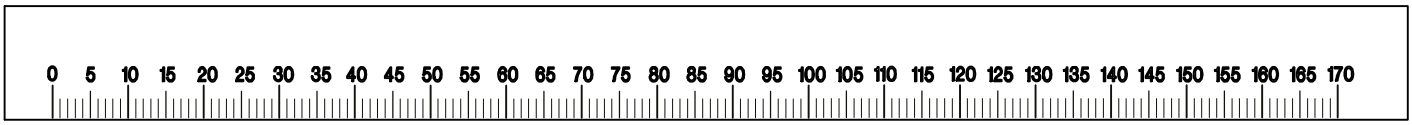

Important – Please read these instructions fully before starting assembly

If you need help or have damaged or missing parts, please email aftersales@gpmfurniture.co.uk

Assembly Instructions

If you have damaged or missing components,
email: aftersales@gpmfurniture.co.uk

Step 1

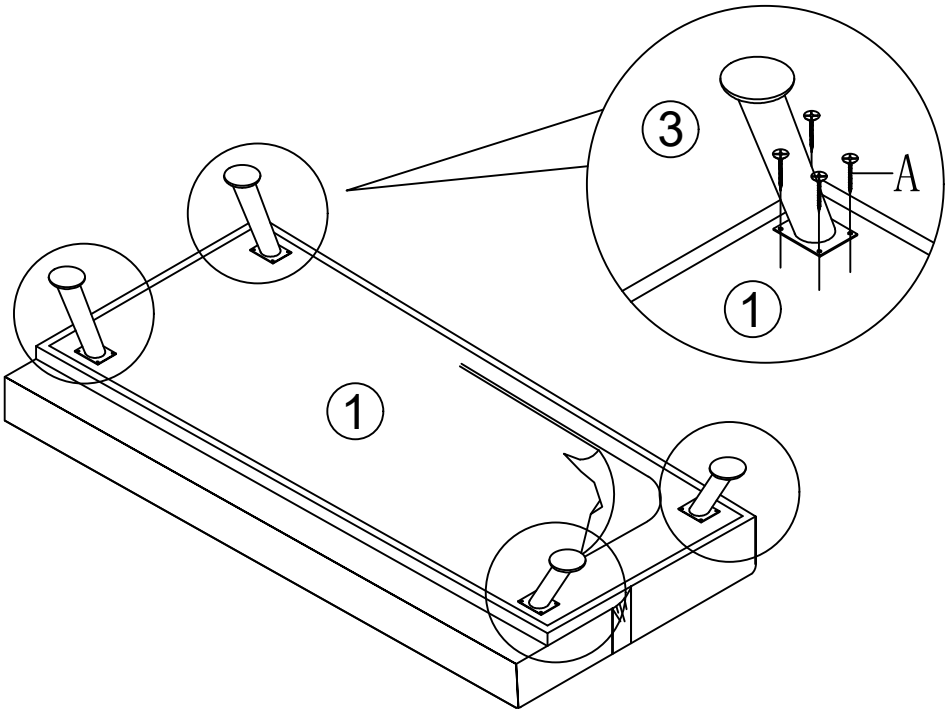

Assembly Instructions

If you have damaged or missing components,
email: aftersales@gpmfurniture.co.uk
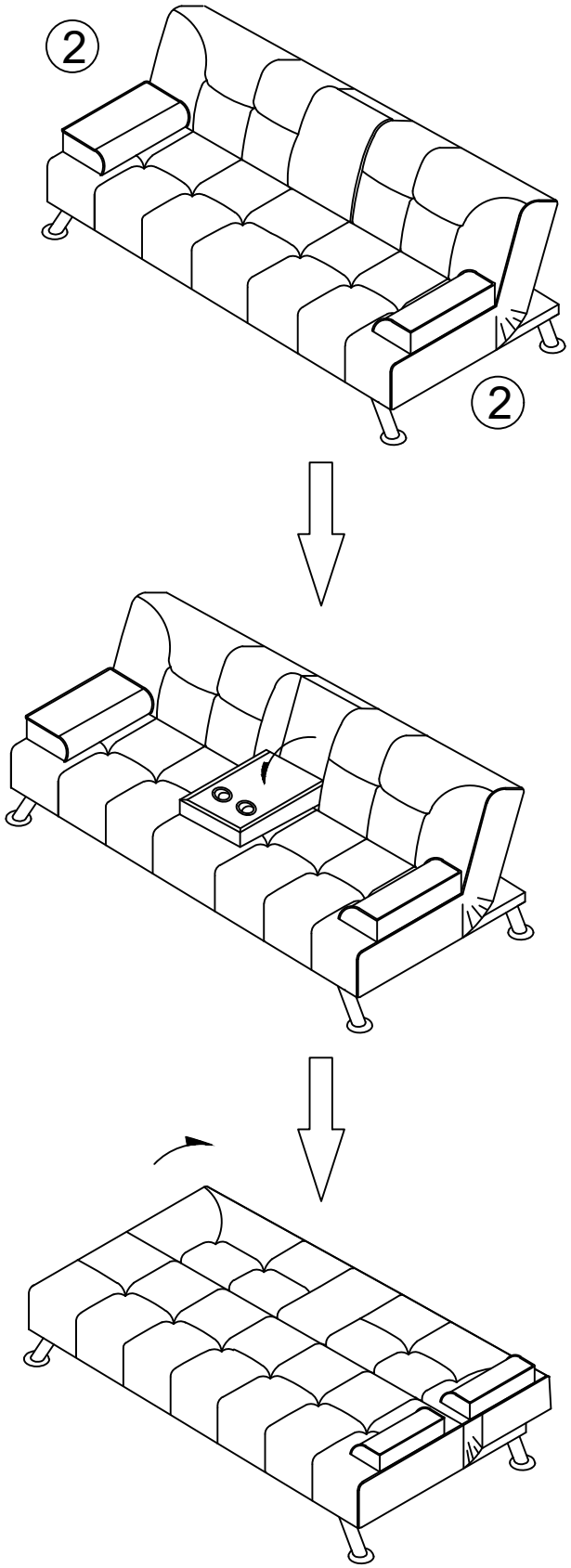
Step 2