GLOBAL PROCUREMENT AND MARKETING LIMITED

TV stand

Assembly Instructions - Please keep for future reference | TVSLUN2DR

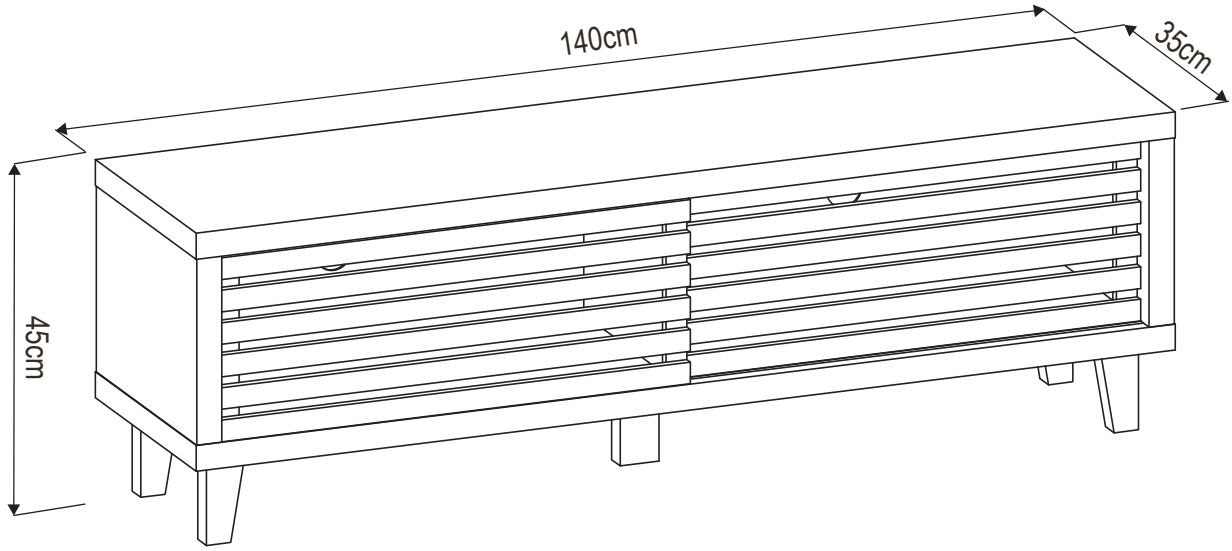

Dimensions	No. people	Assembly Time	SKU #
Width: 140cm Depth: 35cm Height: 45cm		30 mins (approx.)	TVSLUN2DR

thank you

For purchasing this **GPM Limited** product

Important - Please read these instructions fully before starting assembly

If you need help or have damaged or missing parts, please email **aftersales@gpmfurniture.co.uk**

Safety and Care Advice

Important - Please read these instructions fully before starting assembly

- Check you have all the components and tools listed on pages 4 and 5.
- Remove all fittings from the plastic bags and separate them into their groups.
- Keep children and animals away from the work area, small parts could choke if swallowed.
- Make sure you have enough space to lay out the parts before starting.
- Do not stand or put weight on the product, this could cause damage.
- Assemble the item as close to its final position (in the same room) as possible.
- Assemble on a soft, level surface to avoid damaging the unit or your floor.
- We do not recommend the use of power drill/drivers for inserting screws, as this could damage the unit. Only use hand screwdrivers.

- Dispose of all packaging carefully and responsibly.

Care and Maintenance

- Only clean using a damp cloth and mild detergent, do not use bleach or abrasive cleaners.
- From time to time check that there are no loose screws on this unit.
- This product should not be discarded with household waste. Take to your local authority waste disposal centre.

If you are unhappy with the product and wish to return it, please follow the retailer's returns procedure.

Exploded View

If you have damaged or missing components,
email: **aftersales@gpmfurniture.co.uk**

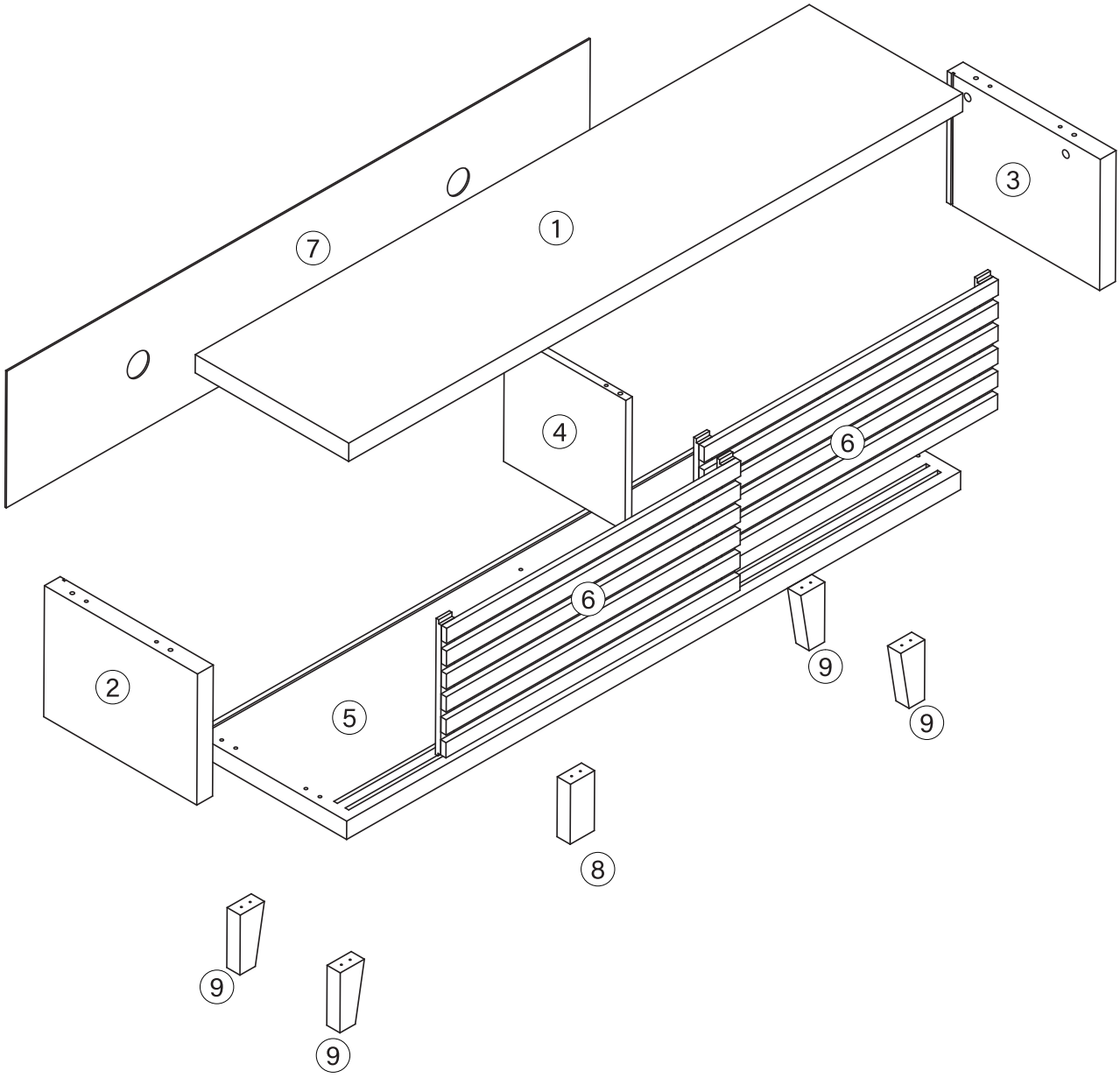

Components - Fixings

If you have damaged or missing components,
email: **aftersales@gpmfurniture.co.uk**

Please check that you have all the components listed below before constructing your item.

Note: The quantities below are the correct amount to complete the assembly. In some cases more fittings may be supplied than are required.

(A)	6pcs	**(B)**	6pcs	**(C)**	10pcs	**(D)**	12pcs
(E)	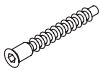 6pcs	**(F)**	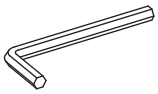 1pc	**(G)**	20pcs	**(H)**	10pcs
(I)	10pcs	**(J)**	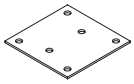 5pcs	**(K)**	6pcs		

Tools Required

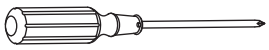
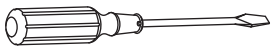
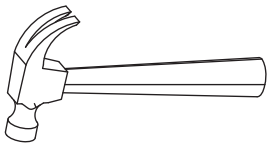

Ruler - Use this to measure your screws (mm)

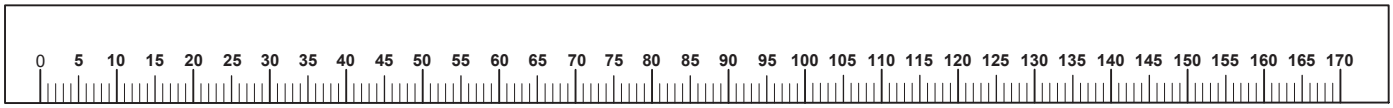

Important - Please read these instructions fully before starting assembly

If you need help or have damaged or missing parts, please email **aftersales@gpmfurniture.co.uk**

Assembly Instructions

If you have damaged or missing components,
email: **aftersales@gpmfurniture.co.uk**

Step 1

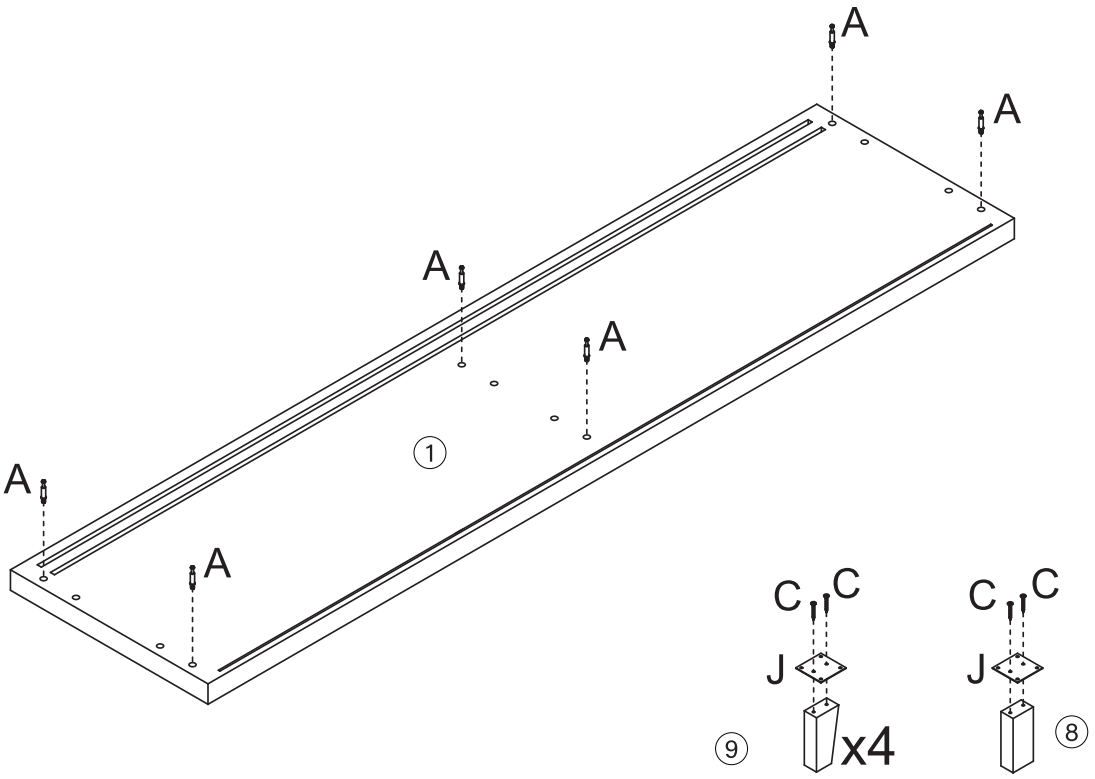

Step 2

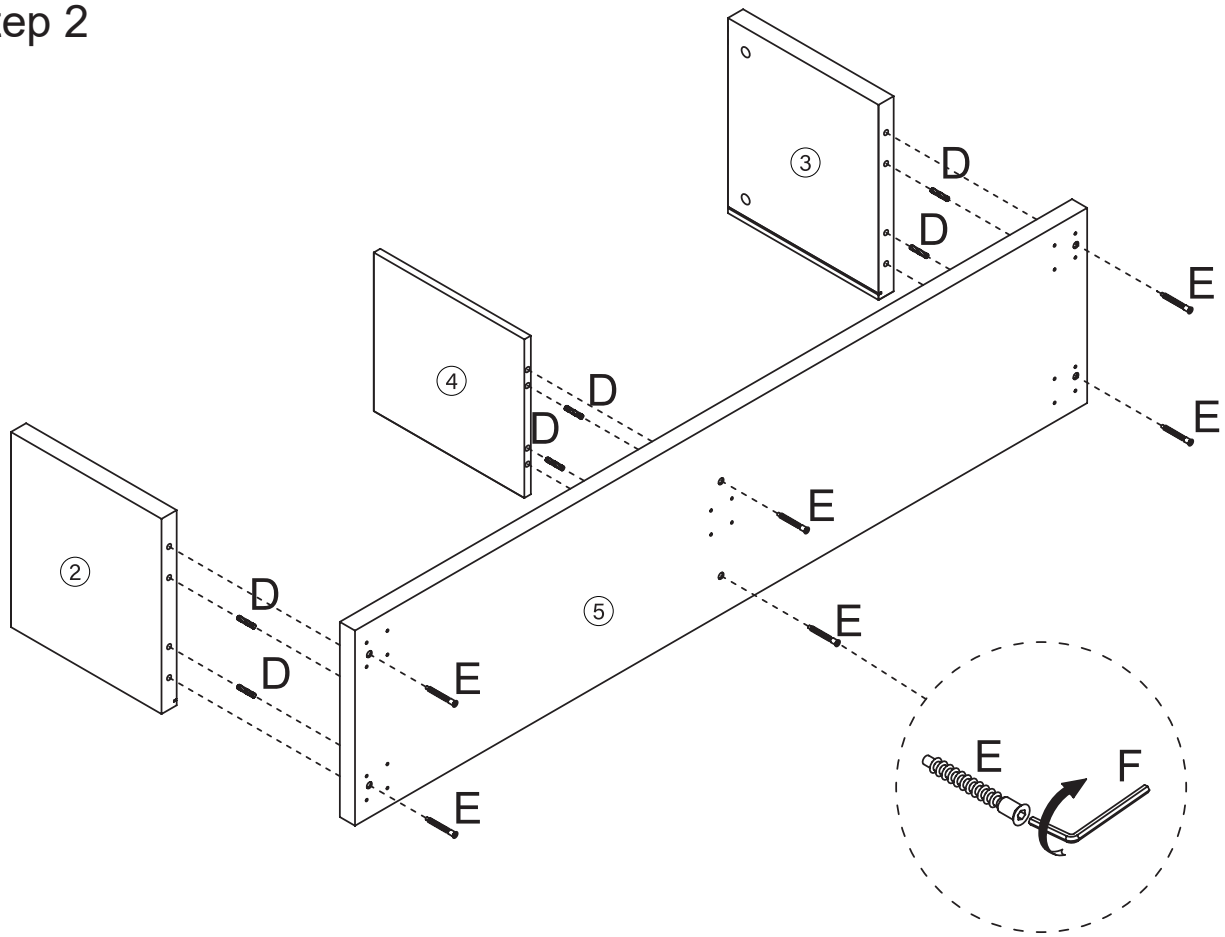

Assembly Instructions

If you have damaged or missing components,
email: **aftersales@gpmfurniture.co.uk**

Step 3

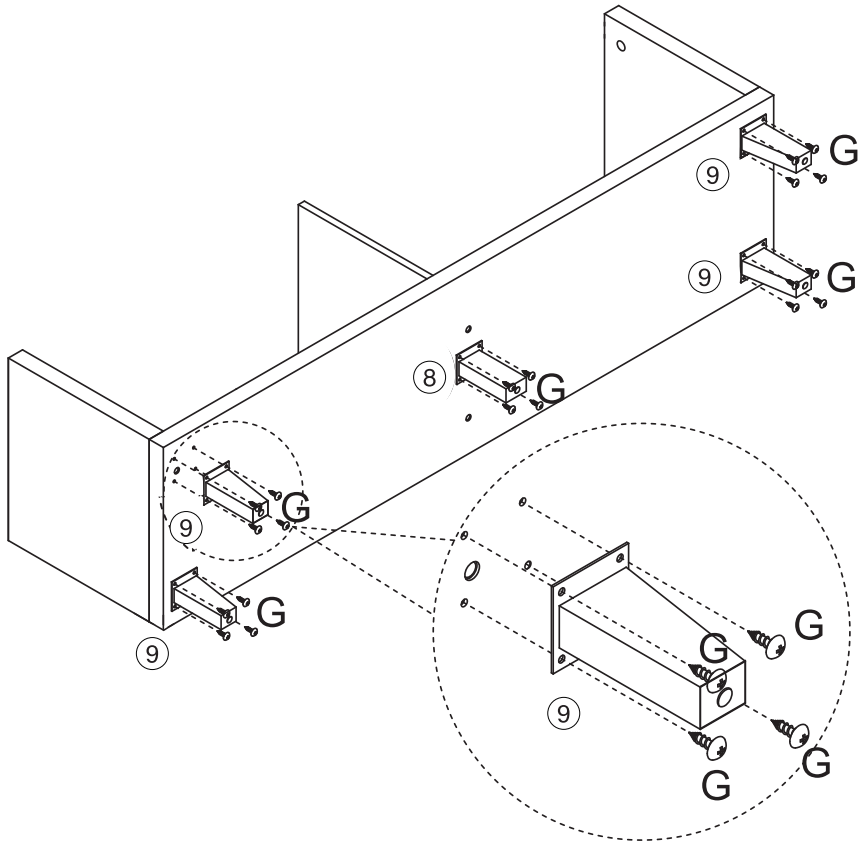

Step 4

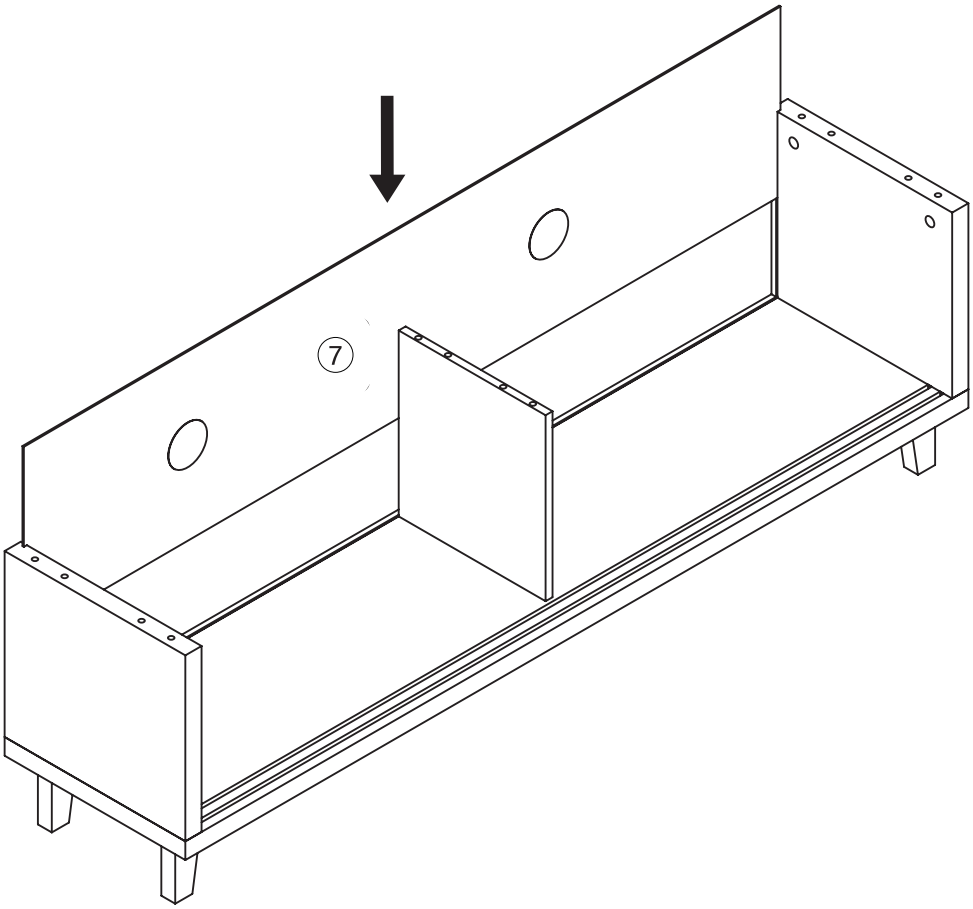

Assembly Instructions

If you have damaged or missing components,
email: **aftersales@gpmfurniture.co.uk**

Step 5

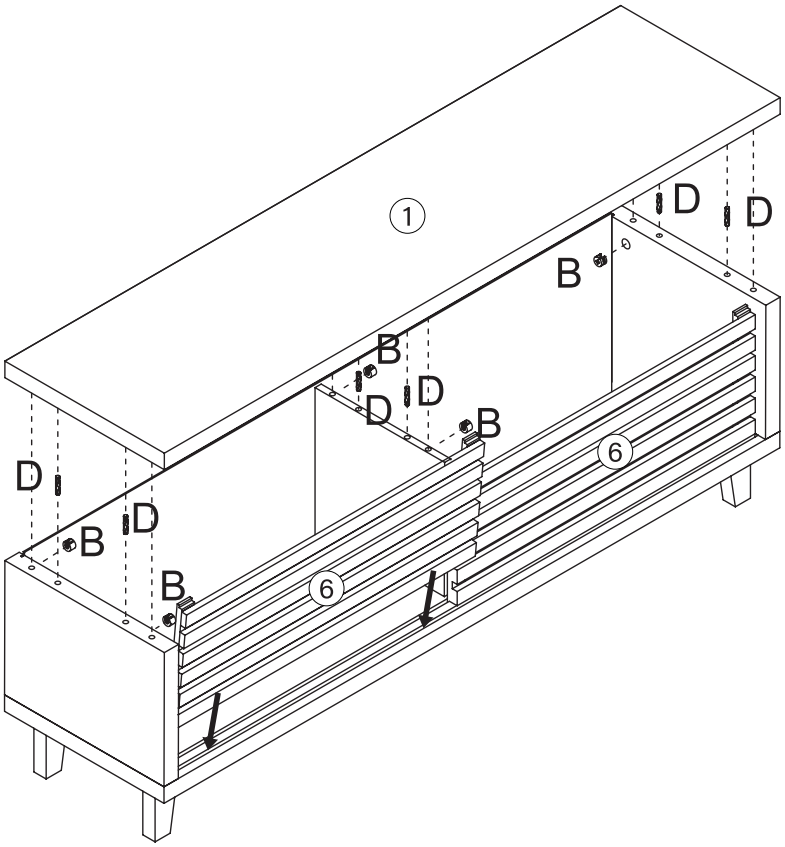

Step 6

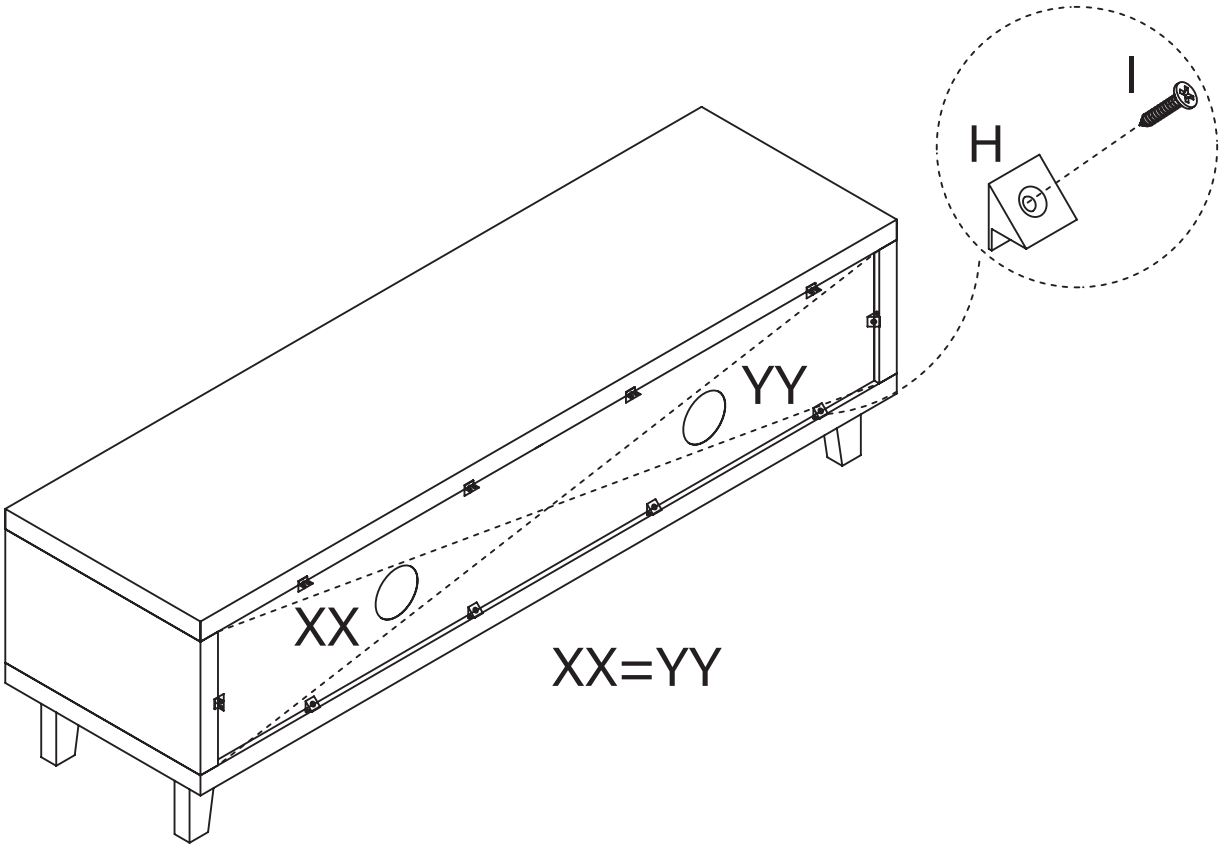

Assembly Instructions

If you have damaged or missing components,
email: **aftersales@gpmfurniture.co.uk**
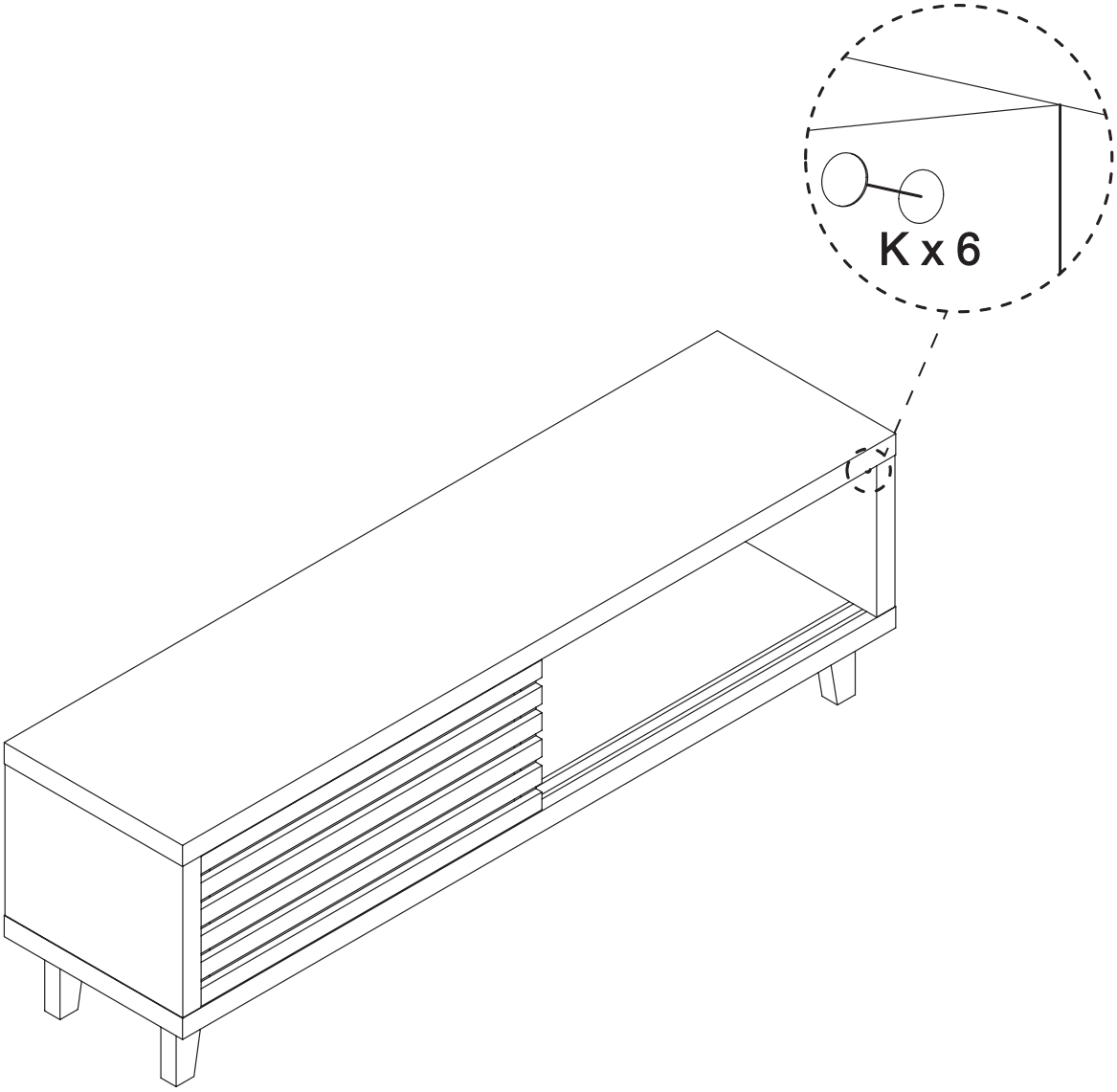
Step 7